MDL POWERUP LIMITED

Dalston Carlisle

MDL POWERUP
01228 712121

OPERATERS MANUAL

AGL125/165 Medium Duty Verge Mower

Please read through manual thoroughly before operation

CE

For any technical issues please call the workshop on 01228 712121

Or email info@mdlpowerup.com

INDEX:

2	Index
3	Safety instructions
4	Equipment safety guidelines
6	Preparation
7	Starting and stopping safety
8	Operational safety
11	Transport safety
12	Maintenance safety
13	Storage Safety
14	Assembly instructions
17	Sizing the PTO
18	Setting the machine up
20	Fluids/lubricants / greasing / maintenance / season maintenance
21	Annual Maintenance / PTO maintenance
23	Storage
24	Trouble shooting
25	AGL Main Assembly
24	AGL Lifting Part Assembly

PRODUCT MODELS

AGF SERIES FLAIL MOWER MODELS

Model	AGL125	AGL165
Power required	15-25hp	25-45hp
3-Point linkage	CAT. I	CAT. I
Cutting width(mm)	1250	1650
Weight(KG)	250	310
NO. Hammer	20	28
NO. Belts	3	3

SAFETY INSTRUCTIONS

Before operating the your AGL flail mower, please read the following safety instructions. Failure to comply with these warnings may result in serious injury or death.

Please review these safety instructions with all users annually.

SIGNAL WORDS: The signal words DANGER, WARNING and CAUTION are used with the safety messages in this manual and with each safety sign. They are defined as follows:

DANGER: Indicates an immediate hazardous situation that, if not avoided, could result in serious injury or death. This signal word is to be limited to the most extreme situations typically for machine components that, for functional purposes, cannot be guarded.

WARNING: Indicates a potentially hazardous situation that, if not avoided, could result in serious injury or death, and includes hazards that are exposed when guards are removed. It may also be used to alert against unsafe practices.

CAUTION: Indicates a potentially hazardous situation that, if not avoided, may result in minor or moderate injury. It may also be used to alert against unsafe practice.

EQUIPMENT SAFETY GUIDELINES

- Safety of the operator and bystanders is one of the main concerns in designing and developing a mower. However, every year accidents occur which could have been avoided by a few seconds of thought and a more careful approach to handling the equipment. You, the operator, can avoid many accidents by observing the following precautions and insist those working with you, or for you, follow them.

- In order to provide a better view, certain photographs or illustrations in this manual may show an assembly with a safety shield removed. However, equipment should never be operated in this condition. Keep all shields in place. If shield removal becomes necessary for repairs, replace the shield prior to use.

- Replace any safety sign that is not readable or missing. Location of such safety signs are indicated in this manual.

- Never use alcoholic beverages or drugs that can hinder alertness or coordination while operating this equipment. Consult your doctor about operating this machine while taking prescription medications.

- Under no circumstances should children under the age of 18 be allowed to work with this equipment. Do not allow persons to operate or assemble this unit until they have read this manual and have developed a thorough understanding of the safety precautions and how it works.

- This equipment is dangerous to children and persons unfamiliar with its operation. The operator should be a responsible, properly trained and physically able person familiar with farm machinery and trained in this equipment's operations. If the elderly are assisting with farm work, their physical limitations need to be recognized and accommodated.

- Use a tractor equipped with a Roll Over Protective System and seat belts. (ROPS)

- Never exceed the limits of a piece of machinery. If its ability to do a job, or to do so safely, is in question.

- Do not modify the equipment in any way. Unauthorized modification could result in serious injury or death and may impair the function and life of the equipment. It will also VOID any warranty.

- In addition to the design and the confirmation of this implement, including safety signs and safety equipment, hazard control and accident prevention are dependent upon the awareness, concern, prudence, and proper training of the

person involved in the operation, transport, maintenance, and storage of the machine. Refer also to safety messages and operation instruction in each of the appropriate sections of the tractor and mower manuals. Pay close attention to the safety signs affixed to the tractor and the mower.

- **Safety is a primary concern in the design and manufacturing of our product. Unfortunately, our efforts to provide safe equipment can be wiped out by a single careless act of an operator or bystander.**

- **In addition to the design and configuration of equipment, hazard control and accident prevention are dependent upon the awareness, concern, prudence and proper training of personnel involved in the operation, transport, maintenance and storage of this equipment.**

- **It has been said, "The best safety device is an informed, careful operator." We ask you to be that kind of operator. It is the operator's responsibility to read and understand all safety and operating instructions in the manual and to follow them. Accidents can be avoided.**

- **Working with unfamiliar equipment can lead to careless injuries. Read this manual, and the manual for your tractor, before assembly or operating, to acquaint yourself with the machines. If this machine is used by any person other than you, or is loaned or rented, it is the Flail mower owner's responsibility to make certain that the owner's manual be available to the operator prior to operating:**
  1- Reads and understands the operator's manuals.
  2- Is instructed in safe and proper use.

- **Know your controls and how to stop the tractor, engine, and mower quickly in case of an emergency. Read this manual and the one provided with your tractor.**

- **Train all new users and review instructions frequently with existing workers. Be certain only a properly trained and physically able person will operate the machinery. A person who has not read and understood all operating and safety instructions is not qualified to operate the machine. An untrained operator exposes himself and bystanders to possible serious injury or death. If the elderly are assisting with farm work, their physical limitations need to be recognized and accommodated.**

PREPARATION

- Never operate the tractor and mower until you have read and completely understand this manual, the Tractor Operator's Manual, and each of the safety messages found on the safety signs on the tractor and mower.

- Personal protection equipment including hardhat, safety glasses, safety shoes, and gloves are recommended during assembly, installation, operation, adjustment, maintenance, repairing, removal, or moving the implement. Do not allow long hair, loose fitting clothing, or jewelry to be around equipment.

- PROLONGED EXPOSURE TO LOUD NOISE MAY CAUSE PERMANENT HEARING LOSS! Tractors with or without mowers attached can often be noisy enough to cause permanent, partial hearing loss. We recommend that you wear hearing protection on a full-time basis if the noise in the operator's position exceeds 80 db. Noise over 80 db on a long-term basis can cause severe hearing loss. Noise over 90 db adjacent to the opera-tor over a long-term basis may cause permanent, total hearing loss. NOTE: Hearing loss from loud noise (from tractors, chain saws, radios, and other such sources close to the ear) is cumulative over a lifetime without hope of natural recovery.

- Operate the mower only with a tractor equipped with an approved Roll-Over-Protective System (ROPS). Always wear your seat belt. Serious injury or even death could result from falling off the tractor — particularly during a turnover when the operator could be pinned under the ROPS or the tractor.

- Clear area to be worked of stones, branches or other debris that might be thrown or entangled in the mower, causing injury or damage.

- Operate only in daylight or good artificial light.

- Ensure mower is properly mounted, adjusted and in good operating condition.

- Ensure that all safety shielding and safety signs are properly installed and in good condition.

STARTING AND STOPPING SAFETY

- Check the tractor master shield over the PTO stub shaft. Make sure it is in good condition and fastened securely to the tractor. Purchase a new shield if old shield is damaged or missing.

- All tractors that are not equipped with a "live" power takeoff (PTO) need to be equipped with an over-running PTO clutch. These are available through most farm equipment stores. NOTE: The addition of an over-running PTO clutch may change the length of the PTO driveline required. Pay extra attention to the instructions on the PTO Driveline Installation. Be sure that the driveline system guarding is adequate.

- Mower operating power is supplied from the tractor PTO. Refer to your tractor manual for PTO engagement and disengagement instructions. Know how to stop tractor and mower quickly in case of an emergency.

- When engaging the PTO, the engine RPM should always be at idle speed. Once engaged and ready to start working, raise PTO speed to 540-RPM and maintain throughout working operation.

OPERATIONAL SAFETY

- The use of this equipment is subject to certain hazards that cannot be protected against by the mechanical means or product design. All operators of this equipment must read and understand this entire manual, paying particular attention to safety and operating instructions, prior to using. If there is something in this manual you do not understand, ask your supervisor, or your dealer, to explain it to you.

- Most accidents occur because of neglect or carelessness. Keep all helpers and bystanders at least several hundred feet from an operating Flail mower. Only properly trained people should operate this machine.

- When machine is operated in populated areas where thrown objects could injure persons or property, operation must be stopped when anyone comes within several hundred feet.

- The majority of the accidents involve entanglement on the driveline, injury of bystanders by the objects thrown by the rotating tines, and operators being knocked off the tractor by low hanging limbs and then being run over by the mower. Accidents are most likely to occur with machines that are loaned or rented to someone who has not read the owner's manual and is not familiar with a Flail mower.

- The Flail mower is designed for use only on tractors with the power take-off (PTO) turning at 540-RPM.

- Install and secure all guards and shields before starting or operating. The mower tines, driveline guards and tractor, shields should be used and maintained in good working condition. They should be inspected carefully, at least daily, for missing or broken chain links, shields, or guards. (Worn items must be replaced at once to reduce possibility of injury.)

- Disengage power takeoff (PTO) and place transmission in neutral before attempting to start engine.

- Many varied objects, such as wire, cable, rope, or chains, can become entangled in the operating parts of the mower. These items could then swing outside the housing at greater velocities than the tines. Such a situation is extremely hazardous. Inspect the cutting area for such objects before working. Remove any like objects from the site.

- Never allow the working tines to contact such items. Never assume an area is

clear. Always Check!

- Always stop the tractor, disengage PTO, set brake, shut off the tractor engine, remove the ignition key, lower implement to the ground and allow rotating pieces to come to a complete stop before dismounting tractor. Never leave equipment unattended with the tractor running.

- Never place hands or feet under mower with tractor engine running or before you are sure all motion has stopped. Stay clear of all moving parts.

- Do not reach or place any part of your body under equipment until it is blocked securely.

- Do not allow riders on the Flail mower or tractor at anytime. There is no safe place for
  any riders.

- Do not operate unless all personnel, livestock, and pets are several hundred feet away to prevent injury by thrown objects.

- Never operate tractor and Flail mower under trees with low hanging limbs. Operators can be knocked off the tractor and then run over by the rotating tines.

- The rotating parts of this machine have been designed and tested for rugged use. However, they could fail upon impact with heavy, solid objects such as steel guardrails and concrete abutment. Such impact could cause the broken objects to be thrown outward at very high velocities. To reduce the possibility of property damage, serious injury, or even death, never allow the working tines to contact such obstacles.

- Stop Flail mower and tractor immediately upon striking an obstruction. Turn engine off, remove key, inspect and repair any damage before resuming operation.

- Stay alert for uneven terrain, holes, rocks, and roots and other hidden hazards. Keep away from drop-offs and hazards that could cause roll over. Use extreme care and maintain minimum ground speed when trans-porting or operating on hillsides, over rough ground and when operating close to ditches or fences. Be careful and slow down when turning sharp corners and changing direction on slopes. Do not start or stop suddenly on slopes. Avoid operation on steep slopes. In extremely uneven terrain, rear wheels weights, front tractor weight, and/or tire ballast should be used to improve stability.

- **Pass Flail mower diagonally through sharp dips and avoid sharp drops to prevent "hanging up" tractor and Flail mower. Practice will improve your skills in maneuvering on rough terrain. Always cut down slopes, never across the face. Always check tractor manual for proper use on slopes.**

- **When using a unit, a minimum 20% of tractor and equipment weight must be on tractor front wheels. Without this weight, tractor could tip over, causing personal injury or death. The weight may be attained with a front-end loader, front wheel weights, ballast in the tires or front tractor weights. When attaining a minimum 20% of tractor and equipment weight on the front wheels, you must not exceed the ROPS weight certification. Weigh the tractor and equipment. Do not guess or estimate!**

TRANSPORT SAFETY

- Comply with state and local laws governing highway safety and movement of farm machinery on public roads.

- The use of flashing amber lights is acceptable in most localities. However, some localities prohibit their use. Local laws should be checked for all lighting and marking requirements.

- At all times, when driving the tractor and equipment on the road or highway under 20 m.p.h. (32kph) use flashing amber warning lights and a slow moving vehicle (SMV) identification emblem. Do not exceed 20 m.p.h. (32 kph). Reduce speed on rough roads and surfaces.

- Plan your route to avoid heavy traffic.

- Always install transport locks, pins or brackets before transporting.

- Do not drink and drive.

- Be a safe and courteous driver. Always yield to oncoming traffic in all situations, including narrow bridges, intersections, etc. Watch for traffic when operating near or crossing roadways.

- Turn curves or go up or down hills only at a low speed and at a gradual steering angle. Make certain that a least 20% of the tractor's weight is on the front wheels to maintain safe steerage. Slow down on rough or uneven surface. Always check tractor manual for proper use on slopes.

- Use extreme care and maintain minimum ground and when operating close to ditches or fences. Be careful when turning sharp corners.

- Never allow riders on either tractor or mower.

MAINTENANCE SAFETY

- Good maintenance is your responsibility. Poor maintenance is an invitation to trouble.
    - Follow good shop practices.
    - Keep service area clean and dry
    - Be sure electrical outlets and tools are properly grounded
    - Use adequate light for the job at hand.

- Make sure there is plenty ventilation. Never operate the engine of the towing vehicle in a closed building. The exhaust fumes may cause asphyxiation.

- Before working on this machine, disengage the PTO, shut off the engine, set the brakes, and remove the ignition keys.

- Be certain all moving parts on attachments have come to a complete stop before attempting to perform maintenance.

- Never work under equipment unless it is blocked securely.

- Always use personal protection devices such as eye, hand and hearing protectors, when performing any service or maintenance.

- Frequently check mower tines. They should be sharp, free of nicks and cracks and securely fastened.

- Periodically tighten all bolts, nuts, and screws and check that all cotter pins are properly installed to ensure unit is in safe condition.

- When completing a maintenance or service function, make sure all safety shields and devices are installed before placing unit in service.

- After servicing, be sure all tools, parts and service equipment are removed from mower. Do not allow debris, grease or oil to build up on any deck or platform.

- Where replacement parts are necessary for periodic maintenance and servicing, genuine factory replacement parts must be used to restore your equipment to original specifications.

- The manufacturer will not be responsible for injuries or damages caused by use of unapproved parts and/or accessories.

- A fire extinguisher and the first aid kit should be kept readily accessible while

performing maintenance on this equipment.

STORAGE SAFETY

- Following operation, or when unhooking the mower, stop the tractor, set the brakes, disengage the PTO, shut off the engine and remove the ignition keys.
- Store the unit in an area away from human activity.
- Do not park equipment where it can be exposed to direct contact to livestock for long periods of time. Damage and livestock injury could result.
- Make sure all parked machines are on a hard, level surface and engage all safety devices.

ASSEMBLY INSTRUCTIONS

- Regulating the Tension of Driving Belt by adjusting the bolts.

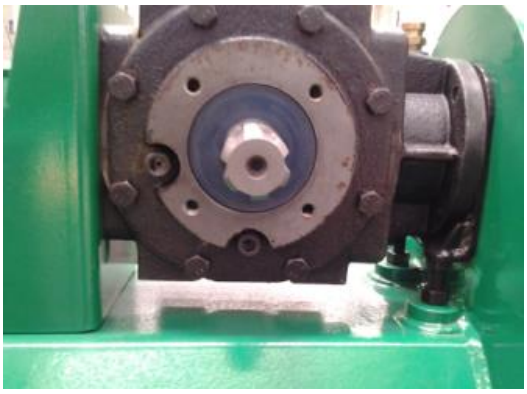

- Fill lubricating oil into the gear box.

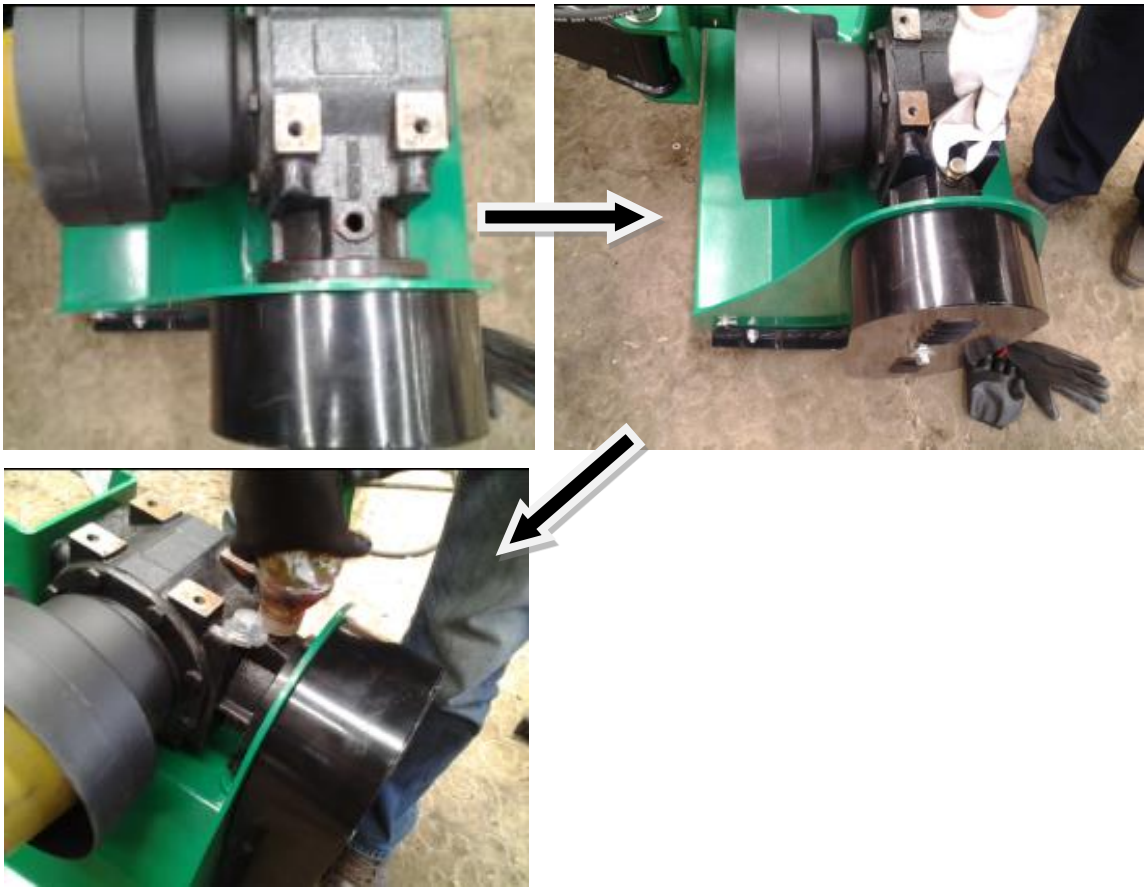

- Assemble the lift arm.

- Assemble the lift arm on the mower.

- Connect the mower to the tractor 3-point hitch, connect the PTO shaft.

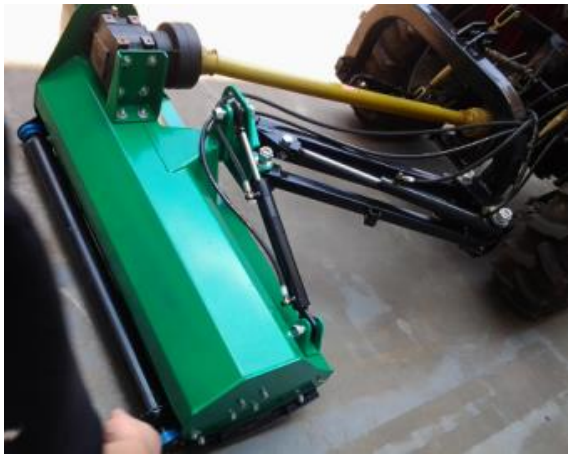

- Lubricate all the nipples on the mower.

SIZING PTO SHAFT

STEP 1 Cutting the PTO shaft to length.
NOTE: Be sure to cut equal lengths of each PTO shaft section. Clamp end of PTO shaft in a vice and cut off shield where marked. (Figure 1-A & 1-B) Figure 1-A

STEP 2 Using cut section of the shield as a guide cut shaft off the same amount. (Figure 2)

STEP 3 Repeat steps 1 and 2 for other PTO shaft section.

STEP 4 Use a file to deburr PTO shafts. Clean up all chips, burrs and filings from both ends of the PTO shaft.

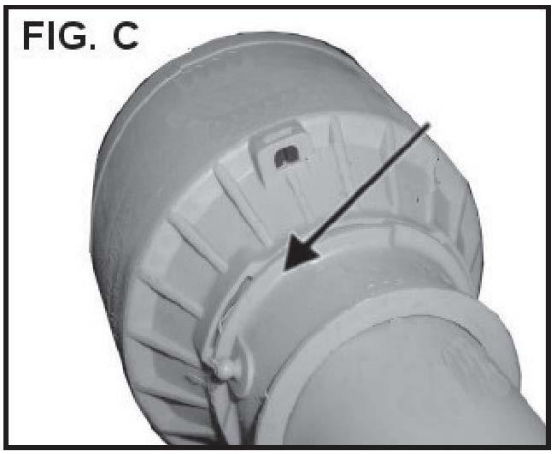

WARNING: IF MOWER IS RAISED UP SO THAT PTO SHAFT IS AT AN ANGLE SHARPER THAN 35 DEGREES PTO MUST BE STOPPED!

STEP 1 Before each use perform the maintenance described in maintenance section.

STEP 2 Read, understand, and follow the information on safety training, preparation, starting and stopping safety, operational safety, transport safety warning sections of this manual.

STEP 3 With the Flail mower positioned on level ground, adjust the tractor lift arms so that when lifted, the rotor bar remains parallel to the ground.

STEP 4 With the Flail mower attached to the tractor, raise and support the mower with suitable blocks. Adjust the skids, located on the sides of the mower. The adjustment bolts for both right and left sides should be positioned in the same adjustment hole. This allows the mower to mow the same depth on each side.

STEP 5 Raise the mower and remove the blocks. Lower the mower to the ground.

STEP 6 With the tractor at idle RPM and the mower lifted off of the ground, engage PTO and slowly advance throttle to 540 PTO RPM. NOTE: Flail mower is designed to run at
540 PTO RPM only.

STEP 7 Select a low gear for the tractor and begin to move forward. Tractor ground speed is to be controlled by gear selection only and not engine speed. As the tractor moves forward, slowly lower the mower down. Allow the mower tines to gradually engage the ground.

STEP 8 After each use clean all debris from the mower tines. Replace any missing or illegible safety decals. Inspect for any damaged or worn parts and replace before next use. Store Flail mower in a dry environment.

- Do not allow the tractor engine or Flail mower to bog down or stall. This causes undue wear and tear on the mower and tractor. If this continues to happen reduce ground speed and raise working depth of Flail mower. Never attempt to re-move objects from the rotor bar until the tractor has been shut down and the mower tines have completely stopped.

- Never attempt to adjust the Flail mower while the tractor is running.

- Never travel at a fast ground speed while using the mower, this could damage it. Never attempt to turn the tractor or travel in reverse with the PTO engaged and the mower in the ground. Always raise the mower out of the ground when backing up or attempting to turn. Failure to due so may cause damage to the mower.

FLUIDS AND LUBRICANTS

1. Grease:
   Use only a grade Type II tube grease.
2. Storing Lubricants:
   Your machine can operate at top efficiency only if clean lubricants are used. Use clean containers to handle all lubricants. Store them in an area protected from dust, moisture and other contaminants.

GREASING

1. Use a hand-held grease gun for all greasing.
2. Wipe grease nipple with a clean cloth before greasing, to avoid injecting dirt and grit.
3. Replace and repair broken nipples immediately.
4. If nipples will not take grease, remove and clean thoroughly. Also clean lubricant passageway. Replace nipple if necessary.

Maintenance

The recommended period is based on normal operating conditions. Severe or unusual conditions may require more frequent maintenance.

Hours or Daily Maintenance

1. Check all nuts and bolts in connection parts, replace if required.

Pump grease into each grease nipple three to five times.
Clean the implement; take away all debris and residue.4.

Season Maintenance

1. Check the machine as above for daily maintenance.
2. Check the bearings of blade spindles for wear and tear. If warn, disassemble, clean and replace them if it is necessary, grease as required.
3. Check the drive belt if tighten.

Annual Maintenance

1. Thoroughly clean the flail mower of debris and residue.
2. Drain the gearbox and clean it thoroughly. Fill with new gear oil up to the dedicated oil level.
3. Check and clean blade axles. Check oil seals and replace if necessary.
4. Check all blades, replace them if they are warn out or damaged.
5. Repair the side skirts; return them to original technical condition. Replace damaged or broken protective devices.
6. Remove the drive shaft from the machine. Pull the PTO shaft apart. Check and replace any. components that are damaged or worn. Install the PTO shaft on the machine. The PTO shaft should telescope easily and the guard turn freely on the shaft, grease if necessary.

	8hrs/Daily	40hrs/Weekly	Annually
Lubricate PTO Shaft	Yes	Yes	Yes
Lubricate Caster Wheels	Yes	Yes	Yes
Lubricate Blade Spindle	Yes	Yes	Yes
Clean Machine			Yes
Lubricate and clean PTO Shaft Cover			Yes

PTO SHAFT MAINTENANCE

The PTO shaft is designed to telescope to allow for dimensional changes as the machine goes through its operating range. A tubular guard encloses the driving components and is designed to remain stationary on a turning shaft when required. The shaft should telescope easily and the guard turn freely on the shaft at all times. Annual disassembly, cleaning and lubrication is recommended to insure that all components function as intended. To maintain the shaft, follow this procedure:

1. Remove the shaft from the machine.
2. Pull shaft apart.
3. Use a screwdriver to pry the tabs out of the sleeves on each end. There are 3 tabs per guard.
4. Pull the shaft out of the plastic tubular guard.
5. Use a solvent to clean the male and female portions of the telescoping ends.
6. Apply a light coat of grease to each end.
7. Clean grooves on each end where the tabs are located. Clean each tab also.
8. Apply a light coat of grease to each groove.
9. Insert the shaft into its respective guard and align the slots with the groove.
10. Insert the tabs through the slots and seat in the groove.
11. Check that each guard turns freely on the shaft.

12. Assemble the shaft.
13. Check that the shaft telescopes easily.
14. Replace any components that are damaged or worn.
15. Install the shaft on the machine.

Maintain the gearbox and hydraulic components by following this procedure:

- Check if the belt is wear out, or replace a new belt.
- Check if the tooth of gear is wear out, or replace a new gear.
- Dirt, debris and salt has to be washed away immediately after using the mower in such circumstances.

STORAGE

After the season's use, the machine should be thoroughly inspected and prepared for storage. Repair or replace any worn or damaged components to prevent any unnecessary down time at the start of next season. To insure a long, trouble free life, follow the procedure outlined below:

1. Thoroughly wash the machine using a pressure washer to remove all dirt, mud, debris and residue.
2. Inspect the blades and rotor for damage or entangled material. Repair or replace damaged parts. Remove all entangled material.
3. Lubricate all grease nipples. Make sure that all grease cavities have been filled with grease to remove any water residue from the inside.
4. Touch up all paint nicks and scratches to prevent rusting.
5. Move to storage area.
6. Select an area that is dry, level and free of debris.
7. Unhook from tractor.
8. If the machine cannot be placed inside, cover with a waterproof tarpaulin and tie securely in place.

Store the machine in an area away from human activity. Do not allow children to play on or around the stored machine.

Trouble Shooting

The Flail mower is designed to work on unplowed and plowed field. It is a simple and reliable system that requires minimal maintenance.
In the following section, we have listed many of the problems, causes and solutions to the problems that you may encounter.

Problem	Possible Cause	Solution
PTO Shaft inclined too much	Flail mower failed horizontal level	Adjust the horizontal level of the Mower
	One side sway chain of tractor is too short	Adjust the chain
PTO Shaft injured	Direction mistaken	Re-assemble correctly
	Grease deficient	Rinse needle and pump grease sufficiently
	Angle of PTO Shaft is too big or is gripped	Limit the rising position and re-lock the position
	Flail mower fallen down the soil sharply	Fall the Mower down the soil smoothly
Noise in gearbox	The clearance between the two helical bevel gears is too large	Adjust this clearance
	Bearing injured	Replace bearing
	Tooth of gear broken	Replace gear
Trouble rotation of cultivator shaft	Gear or bearing injured or gripped	Replace gear or bearing
	There was no clearance between the two helical bevel gears	Adjust the clearance of the helical bevel gear pair
	Out of shape of left side plane	Correct side plane
	Cultivator shaft crooked or out of shape	Correct or replace cultivator shaft
	Cultivator shaft twined with grass or hold soil seriously	Clear away grass or soil

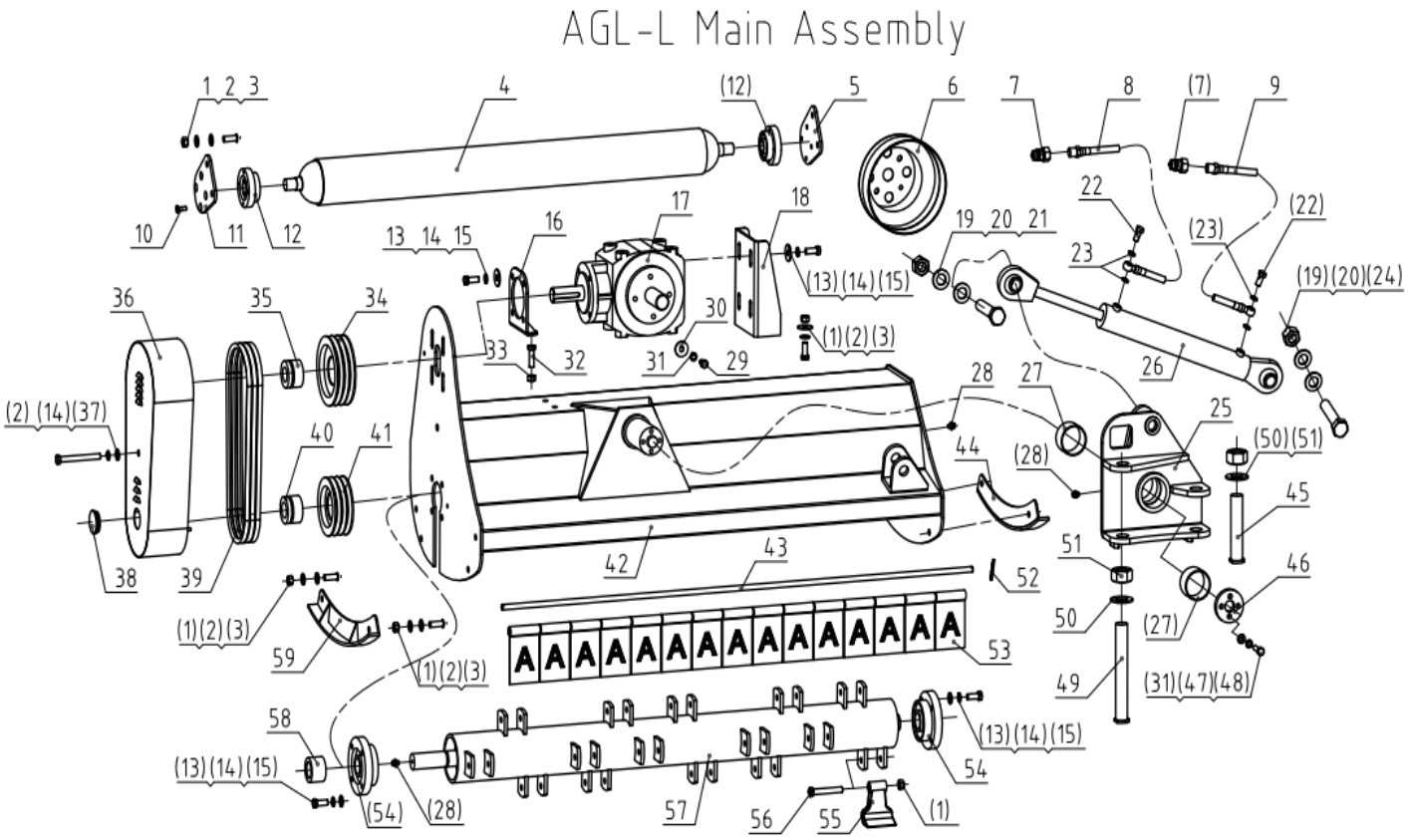

AGL-L Main Assembly			
Ser.No.	Part No.	Name & Specification	Quantity
1	GB/T 6184	Lock nut	8+N
2	GB/T 97.1-86	Washer 12	23
3	GB/T 5783-86	hexagon bolt M12*35	8
4	EFGC175.012	Roller weldment	1
5	AGL125.108	Roller plate (Right)	1
6		PTO guard	1
7	ISO 7241-1B	Quick-change connector	2
8	AGF140.022	Hydraulic hose 3700	1
9	AGF140.023	Hydraulic hose 3350	1
10	GB/T 70.3	Hex head screwsM8*25	8

11	AGL125.109	Roller plate (Left)	1
12	UC205-Z	Bearing seat UC205-Z	2
13	GB/T 5783-86	Hexagon bolt M12*30	16
14	GB/T 93-86	Spring washer 12	17
15	GB/T 96.2-86	Washer 12	10
16	AGL125.020	Gearbox adjustment plate	1
17	XH50.300Z.03W	Gearbox	1
18	AGL125.016	Gearbox seat weldment	1
19	GB/T 6184-86	Lock nut M24	2
20	GB/T 97.1-86	Washer 24	4
21	GB/T 5783-86	hexagon bolt M24*120	1
22	EFGCH175.106	Hollow bolt M12*1.25	2
23		Bonded washer 12	4
24	GB/T 5783-86	Hexagon bolt M24*110	1
25	AGL-L125.012	Flip frame welded pieces	1
26	AGL125.011	turn over cylinder	1
27		Bearing 63*68*40	2
28		Slip M8	3
29	GB/T 5783-86	hexagon bolt M10*20	4
30	GB/T 96.2-86	Washer 12	4
31	GB/T 93-86	Spring washer 10	8
32	GB/T 5783-86	hexagon bolt M12*40	1
33	GB/T 6170-86	Nut M12	1
34	AGL125.114	Big pulley	1
35	JB/T7934Z3	Tension 33*60	1
36	AGL-L125.015	Belt cover	1
37	GB/T 5783-86	Hexagon bolt M12*130	1
38		Rubber cover	1
39	GB/T 11544	Belt 13*1016	3
40	JB/T7934Z3	Tension 35*60	1

41	AGL125.113	Small pulley	1
42	AGL-L125.011	Body weldment	1
43	EFGC175.110	Shaft guard	1
44	AGL125.017	Skilled plate(right)	1
45	AGL125.105	Swing pin (short)	1
46	AGL125.104	Lock plate	1
47	GB/T 5783-86	hexagon bolt M10*40	4
48	GB/T 97.1-86	Washer 10	4
49	AGL125.103	Swing pin (long)	1
50	GB/T 97.1-86	Washer 30	2
51	GB/T 6184-86	Lock nut M30	2
52	GB/T 91	Cotter pin	2
53	EFGC175.108/109	Back cover	n
54	UC207-Z	Bearing UC207-Z	2
55	AGL125.112	Hammer	N
56	GB/T 5783-86	hexagon bolt M12*80	N
57	AGL125.026	Blade shaft	1
58	EFGC175.103	Bush	1
59	AGL125.018	Skilled plate(Left)	1

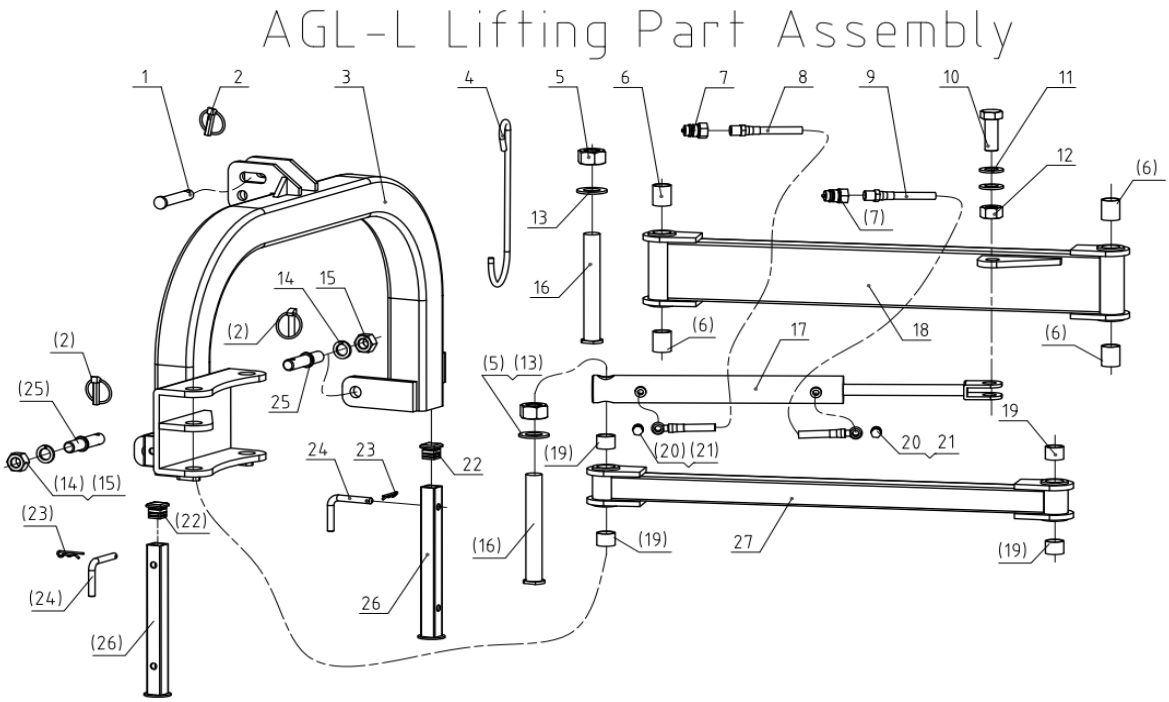

AGL-L Linkage			
Ser.No.	Part No.	Name & Specification	Quantity
1	EFGC175.116	Upper pin	1
2		pin assembly	3
3	AGL-L125.014	linkage weldment	1
4	AGL125.111	hook	1
5	GB/T 6184	Lock nut M30	2
6		Bearing 30*34*40	4
7	ISO 7241-1B	Quick-change connector	2
8	AGF140.032	Hydraulic hose 2000	1
9	AGF140.024	Hydraulic hose 2400	1
10	GB/T 5783-86	hexagon bolt M24*65	1
11	GB/T 97.1-86	Washer 24	2
12	GB/T 6184	Lock nut M24	1
13	GB/T 97.1-86	Washer 30	2
14	GB/T 93-86	Spring washer 22	2
15	GB/T 6170-86	Nut M22	2
16	AGL125.103	Swing arm pin	2

17	AGL125.012	Swing cylinder	1
18	AGL-L125.013	Rotating arm weldment	1
19		Bearing 30*34*25	4
20		Bonded washer	4
21	EFGCH175.106	Hollow bolt M12*1.25	2
22		Plug	2
23		R pin	2
24	EFGC175.115	Pin	2
25	EFGCH175.105	Lower Pin	2
26	AGL125.014	Support weldment	2
27	AGL125.013	Rotating arm	1